IN3027UG: Asynchronous Sample Rate Converter IP User Guide

The information disclosed to you hereunder (the "Materials") is provided solely for the selection and use of Intona products. To the maximum extent permitted by applicable law: (1) Materials are made available "AS IS" and with all faults, Intona hereby DISCLAIMS ALL WARRANTIES AND CONDITIONS, EXPRESS, IMPLIED, OR STATUTORY, INCLUDING BUT NOT LIMITED TO WARRANTIES OF MERCHANTABILITY, NON-INFRINGEMENT, OR FITNESS FOR ANY PARTICULAR PURPOSE; and (2) Intona shall not be liable (whether in contract or tort, including negligence, or under any other theory of liability) for any loss or damage of any kind or nature related to, arising under, or in connection with, the Materials (including your use of the Materials), including for any direct, indirect, special, incidental, or consequential loss or damage (including loss of data, profits, goodwill, or any type of loss or damage suffered as a result of any action brought by a third party) even if such damage or loss was reasonably foreseeable or Intona had been advised of the possibility of the same. Intona assumes no obligation to correct any errors contained in the Materials or to notify you of updates to the Materials or to product specifications. You may not reproduce, modify, distribute, or publicly display the Materials without prior written consent. Intona products are not designed or intended to be fail-safe or for use in any application requiring fail-safe performance.

© Copyright Intona Technology GmbH, Germany.
Intona and other designated brands included herein are trademarks of Intona in Germany and other countries. All other trademarks are the property of their respective owners.

Website: https://intona.eu

Contents

1 Introduction **3**
1.1 Features . . . 3
1.2 Requirements . . . 3
1.2.1 Native Multipliers . . . 3
1.2.2 RAM buffers . . . 3
1.3 Licensing and Ordering . . . 3

2 Application **4**
2.1 Block Diagram . . . 4

3 Designing with the Core **4**
3.1 Asynchronous Mode . . . 5
3.2 Synchronous Mode . . . 5
3.3 Reset Signal . . . 6
3.4 Health Module . . . 6
3.5 Core Clock . . . 6
3.6 Quad Mode . . . 6
3.6.1 Downsampling from 192 kHz . . . 6
3.6.2 Upsampling to 192 kHz . . . 7
3.7 Determining Latency . . . 7
3.8 Provided Application Examples . . . 7
3.8.1 Common Signals and Parameters . . . 7
3.8.2 Parallel pipelined Input and RAM-interfaced Output . . . 8
3.8.3 TDM, Unidirectional . . . 9
3.8.4 TDM, Bidirectional . . . 10
3.8.5 Massive Parallel . . . 11

4 Simulation **12**
4.1 Prerequisites to run the Simulation . . . 12
4.2 Running a Simulation . . . 12
4.2.1 Example: asrc_system_parallel_32ch . . . 13

5 Performance **14**
5.1 THD+N . . . 14
5.2 Frequency Response . . . 14
5.3 Group Delay . . . 15

6 Resource Utilization **15**
6.1 Device vs. Maximum Channel Count . . . 15
6.2 Channel Count vs. Occupied Slices . . . 15

7 Evaluation of the Core using Digilent Arty **16**
7.1 Connecting the Core . . . 16
7.1.1 Arty Pmod Pinout . . . 16
7.1.2 FPGA Pinout Map . . . 16
7.1.3 Actual Connections . . . 16
7.1.4 Switches . . . 17
7.1.5 Status Indicators . . . 17
7.1.6 Signal Constraints . . . 17
7.2 Binaries . . . 18

8 Appendix **19**
8.1 Definition of Speed Modes . . . 19

1 Introduction

The Intona Asynchronous Sample Rate Converter solution comprises rate conversion to any number of uncompressed PCM audio channels as Intellectual Property (IP) core. The design is FPGA-verified and provided in human-readable Verilog-HDL. The solution excels in low latency and low logic resource allocation at professional grade audio quality.

1.1 Features

The design consists of a polyphase FIR filter that feeds the subsequent convolution process, where the actual resampling happens, with the desired intermediate values. The polyphase is selected out of 4096 predefined coefficients using cubic interpolation with 28 bits of decimal precision. Effective applied taps are in the range of 8 to 66, depending on ratio and output samplerate. A latency counter is provided within the simulation. Because of the uniform FIFO and interpolator interface, there is no conceptual restriction in channel count.

Any arbitrary, synchronous or asynchronous upsampling or downsampling of 24 bit data in the range of 30 to 230 kHz is supported. The resulting THD+N within the audio band is typically better than -135 dB. The channel count is always static and gets not reduced in double or quad mode. A high precision ratio detector for asynchronous deployment is included.

The core is fully pipelined and designed to be as economical as possible regarding logic, RAM and multiplier use. Resource usage can be further optimized by using a fixed system sample rate and by omitting the quad speed mode.

1.2 Requirements

Any FPGA that is capable to run the core logic at desired clock frequency.

Although this core does not require dedicated hardware building blocks such as multipliers or RAMs, it is strongly recommended to make use of pipelined multipliers to achieve optimum speed vs. area.

For the simulation, Verilator and a C++ compiler on macOS or Linux is required. WAV files or VCD logic files can be generated for inspection and verification.

1.2.1 Native Multipliers

The core uses 32x32-to-36 bit multipliers as defined in **`asrc_mult32.v`**. This original Verilog version is primarily used for simulation. In hardware, it is recommended to use one of the pre-generated cores. Provided are cores for Spartan 6 and 7-series (all models). For other FPGA models, the designer may generate those by using the FPGA vendor tools.

Usually, the coefficient core will utilize 4xMULT18/DSP48. The convolution kernel uses 4xMULT18/DSP48 per 32 channels.

1.2.2 RAM buffers

The coefficient data ROM and the FIFO buffers are described in pure Verilog-HDL and will be instantiated automatically as dedicated RAM blocks by the synthesizing process.

1.3 Licensing and Ordering

This IP core solution is provided under the terms of the Intona IP Core License Agreement. For full access to all HDL sources for core functionalities in simulation and in hardware you must purchase a

license for the core. Evaluation licenses are available in form of binary modules with hardware timeout. Contact Intona f or information about pricing and availability.

Ordering code of this core is IN8083IP.

2 Application

In a typical application, the sample rate converter consists of three parts.

1. One or more Input FIFO(s) that can hold enough samples for the convolution. Any number of input FIFOs may be connected to one core. Multiple variations are provided and can be used arbitrarily.
   (a) **`asrc_fifo_parallel`** accepts pipelined parallel PCM input
   (b) **`asrc_fifo_tdm_4x8`** accepts serial TDM data with four strides, up to eight channels each
   An input FIFO is basically a dual ported RAM. The designer is free to connect their own design in place of the provided ones.
2. The core itself (**`asrc_core`**), which computes the right tap value for the convolution at the right time. The core also determines the ratio between input and output when set to asynchronous mode. One core is needed per direction. One core serves any amount of I/O channels.
3. One or more convolution kernels (**`asrc_convolute`**). Each convolution kernel applies the actual resampling to the PCM data held in the respective input FIFO for up to 32 channels. The output is always random access parallel PCM and may be double buffered. Several examples are provided for converting the results to TDM or massive-parallel data.

For bidirectional resampling, the dedicated core **`asrc_core_bidir`** is provided. This actually instantiates two cores that share one set of coefficients as dual-ported ROM. In contrast to using two unidirectional cores in parallel, this saves LUT resources, and 8 to 12 kBytes of block RAM.

2.1 Block Diagram

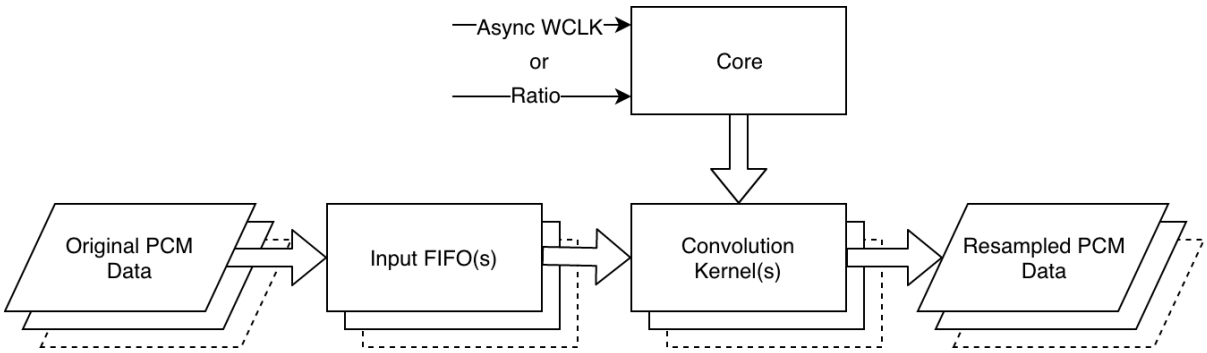

3 Designing with the Core

It is recommended to use the sources directly by copying or sym-linking the contents of the rtl directory to your FPGA hdl sources directory. The provided examples demonstrate how to use the core with a variety of application scenarios.

If you prefer using pre-synthesized netlists, there are some helper scripts provided (ISE only). You need to select a target in the target.cfg file and run **`./make_netlist.sh`** in the top directory of the package. A ngc file will be generated.

3.1 Asynchronous Mode

If the parameter **MANUAL_RATIO** is set to 0, the ratio between input and output word clocks is determined by the core. The internal moving average detector measures the time between two word clock events at 26 bits precision. The time constant is about one second. It also calculates the reciprocal that is needed to scale the output amplitude during downsampling. The **direction** signal reverses the average value with the reciprocal, hence allowing resampling to upstream.

direction	Description
1'b0	Resample arbitrary incoming audio to the internal clock
1'b1	Resample internal audio to the foreign clock

Connect the source of the foreign word clock to the **async_wclk** input.

Clock Domain Crossing
Asynchronous inputs need special attention. To avoid metastability, you should always re-register them to the local high speed clock with a pipeline of at least two registers.

The asrc_core features the 8-bit output **iodiv_out[7:0]** , which is a copy of **iodiv_r[30:23]**. You may use this as an indicator in your application if you need to know at which ratio the resampler is currently working.

3.2 Synchronous Mode

If parameter **MANUAL_RATIO** is set to 1, the core does not derive the ratio from the input word clock. A valid ratio and its reciprocal must be given in 4.28 fixed point format to **iodiv_manual** and **iodiv_r_manual**. They may be changed arbitrarily at runtime without resetting the core.

async_wclk (the input pin for asynchronous word clock) is ignored in synchronous mode. The core just eats up the samples that are fed into the internal FIFO by triggering **new_frame** synchronously. Just like in asynchronous mode, there is no requirement on phase relationship between input and output word clock (other than being synchronous to the high frequency core clock).

iodiv_manual must represent the 4Q28 fixed point value of Fs_{in} divided by Fs_{out} and **iodiv_r_manual**, its reciprocal.

Speed Mode In	Speed Mode Out	out_speedmode[1:0]	iodiv_manual[31:0]	iodiv_r_manual[31:0]
Single	Single	2'd0	32'h1000_0000	32'h1000_0000
Single	Double	2'd1	32'h0800_0000	32'h2000_0000
Single	Quad	2'd2	32'h0400_0000	32'h4000_0000
Double	Single	2'd0	32'h2000_0000	32'h0800_0000
Double	Double	2'd1	32'h1000_0000	32'h1000_0000
Double	Quad	2'd2	32'h0800_0000	32'h2000_0000
Quad	Single	2'd0	32'h4000_0000	32'h0400_0000
Quad	Double	2'd1	32'h2000_0000	32'h0800_0000
Quad	Quad	2'd2	32'h1000_0000	32'h1000_0000

3.3 Reset Signal

The core is partly reset at active high of the reset input signal. You may tie this to your internal reset logic. This pin is optional. Tie to **`1'b0`** if not used.

In general, there is no lockup situation known to that the core would need a reset. If it gets wrong signals, it will output wrong values. If the fed signals become valid again, the core will resume with valid output. Use the **`asrc_health`** module to mute or re-route your outputs if invalid signals are unacceptable.

3.4 Health Module

The **`asrc_health`** module checks some states and the "good" output goes high if the internal FIFOs are not full or empty. It can be used to enable other circuity in the design, such as mute events.

3.5 Core Clock

The core is designed and tested to be clocked at 122.288 MHz for 48/96/192k or at 112.896 MHz for 44.1/88.2/176.4k sample rates. It expects the local frame sync to happen every **`fclk / fsamplerate`**, which depends on the sample speed mode, as shown in the following table:

Sample Speed	Core Clock Ticks per Output Frame
Single	2560
Double	1280
Quad	640

The core triggers at rising edge of the target frame sync signal (**`out_framesync`**).

In synchronous mode (MANUAL_RATIO=1) any other core clock can be accepted by the core, as long the "ticks per output frame", as stated in the table above value, is attainable. For example if your system is clocked at 130 MHz, this will work perfectly fine.

3.6 Quad Mode

This core is designed to accept quad speed sample rates when the parameter **`QUAD_AVAIL`** is set to 1. Setting it to 0 will save 4096 bytes of occupied RAM and the highest acceptable samplerate will drop to about 113 kHz.

There is no hysteresis in changing internal modes when changing sample rate arbitrarily. Notably the edges between double and quad modes should be avoided. It is recommended to use the core within following sample rates:

Usable ranges are:

Fs_{in} 30..113kHz and 115..230kHz.

The ratio between input and output samplerate must not be larger than 4.999.

3.6.1 Downsampling from 192 kHz

Downsampling from e.g. 192kHz to 48kHz is challenging because it would require 128 taps per Fs_{out} which is beyond the maximum of possible taps in this design. It is common to skip the first half of the coefficients this case, effectively scaling it down to 64 taps. However, just skipping does not deliver enough amount of alias image rejection and this is not satisfying the standards of professional audio

equipment. Hence, there is a second coefficient set available which is was optimized to 64 taps at quad downsampling rates.

3.6.2 Upsampling to 192 kHz

The maximum number of possible taps shrink down because the core algorithm needs 32 clock cycles to fetch and interpolate a polyphase tap. At 192 kHz, this would require a core clock of 245.76 MHz. Because this clock is not possible with today's budget FPGAs, this mode is implemented to use the second coefficient set that is available in half of the original size.

3.7 Determining Latency

The simulation has a single-shot peak detector implemented. The Fs time of the first positive peak of each input and output will be saved in a variable and the result is printed to the console when the simulation is done. This could also be implemented as zero-crossing detector but that technique suffers from false-positives when possible pre-ringing occurs, so peak detection is preferred.

```
Simulation done.

Measured latency: 10 fs_out samples
```

3.8 Provided Application Examples

3.8.1 Common Signals and Parameters

`parameter QUAD_AVAIL`

See Quad Mode.

`parameter MANUAL_RATIO`

See Synchronous Mode and Asynchronous Mode.

For other individual signals, see the source files for further explanation of the individual ports.

3.8.2 Parallel pipelined Input and RAM-interfaced Output

Parallel input words are fed into the resampler at rising edge of **new_word**. After $2^{\text{CH_BITS}}$ words have been fed, a **new_frame** pulse must follow to mark the end of frame.

The double buffered output can be read through the RAM interface with **d_out_ch** as address and **d_out** as data.

```
module asrc_system_parallel_ramif
#(
    parameter   CH_BITS      = 5,
    parameter   QUAD_AVAIL   = 1,
    parameter   MANUAL_RATIO = 0
)
(
    input           clk,
    input           reset,
    input           out_framesync,
    input   [1:0]   out_speedmode,
    input           direction,
    input           async_wclk,

    input   [31:0]  iodiv_manual,
    input   [31:0]  iodiv_r_manual,

    input           new_word,
    input           new_frame,
    input   [23:0]  d_in,

    input   [CH_BITS-1:0]
                    d_out_ch,
    output  [23:0]  d_out,

    output          good
);
```

3.8.3 TDM, Unidirectional

Four lanes of eight channels, MSB first, with one-early frame sync. Also available as **asrc_system_tdm_4x2**, which handles four lanes of two channels.

```
module asrc_system_tdm_4x8
#(
    parameter   QUAD_AVAIL   = 1,
    parameter   MANUAL_RATIO = 1
)
(
    input           clk,
    input           reset,
    input   [1:0]   out_speedmode,
    output          good,

    input   [31:0]  iodiv_manual,
    input   [31:0]  iodiv_r_manual,

    input           direction,
    input           async_wclk_in,

    input           tdm_in_bck,
    input           tdm_in_fs,
    input   [3:0]   tdm_in_d,

    input           tdm_out_bck,
    input           tdm_out_fs,
    output  [3:0]   tdm_out_d
);
```

Maximum BCK frequency for the TDM modules is 24.576 MHz.

3.8.4 TDM, Bidirectional

Same as unidirectional, but duplicated ports for additional resampling to upstream direction. This makes use of the bidirectional **asrc_core_bidir**, which will share the coefficient ROM between the two resamplers.

```
module asrc_system_tdm_4x8_bidir
#(
    parameter   QUAD_AVAIL   = 1,
    parameter   MANUAL_RATIO = 1
)
(
    input           clk,
    input           reset,
    input   [1:0]   out_speedmode,
    output          good,

    input   [31:0]  iodiv_manual,
    input   [31:0]  iodiv_r_manual,

    input           direction,
    input           async_wclk_in,

    input           tdm_in_bck,
    input           tdm_in_fs,
    input   [3:0]   tdm_in_d,

    input           tdm_out_bck,
    input           tdm_out_fs,
    output  [3:0]   tdm_out_d,

    // second resampler, other direction:

    input   [1:0]   out_speedmode_1,
    input           tdm_in_bck_1,
    input           tdm_in_fs_1,
    input   [3:0]   tdm_in_d_1,

    input           tdm_out_bck_1,
    input           tdm_out_fs_1,
    output  [3:0]   tdm_out_d_1,

    output          good_1
);
```

3.8.5 Massive Parallel

No less than 32 parallel inputs and outputs.

```
module asrc_system_parallel_32ch
#(
    parameter   QUAD_AVAIL   = 1,
    parameter   MANUAL_RATIO = 1
)
(
    input                clk,
    input                reset,
    input   [1:0]        out_speedmode,
    output               good,

    input   [31:0]       iodiv_manual,
    input   [31:0]       iodiv_r_manual,

    input                async_wclk_in,
    input                direction,

    input                wclk_in,
    input       [23:0]   pcm_in_1,
    input       [23:0]   pcm_in_2,
    input       [23:0]   pcm_in_3,
...
    input       [23:0]   pcm_in_31,
    input       [23:0]   pcm_in_32,

    input                wclk_out,
    output reg  [23:0]   pcm_out_1,
    output reg  [23:0]   pcm_out_2,
    output reg  [23:0]   pcm_out_3,
...
    output reg  [23:0]   pcm_out_31,
    output reg  [23:0]   pcm_out_32
);
```

4 Simulation

Simulation is done using the high performance open source Verilog simulator Verilator, which effectively converts Verilog to C++. The output compiles to a native binary, which can be run on a PC.

> Simulation presumes a Linux (or other Unix, e.g. Mac) command line terminal. On Windows, this may work using WSL (Windows Subsystem for Linux).

4.1 Prerequisites to run the Simulation

Find dependencies and installation instructions of the Verilator simulation suite on this web site[1]. It is recommended to build from Git.

On Debian-flavoured systems, the installation of Verilator including dependencies is simple:

```
sudo apt-get install verilator
```

4.2 Running a Simulation

The system top module, written in C++, generates a stimulus. This is one of static sine tone, swept sine tone or Dirac impulse and it outputs a mono WAV file with the simulated result. Static sine tone is used for THD+N calculation. Swept sine can be used to show aliasing images using **`sndfile-spectrogram`** (which is part of libsndfile sndfile-tools[2]). The Dirac stimulus will create an impulse response that can be used to inspect the frequency response by using deconvolution.

Verilator uses a much faster simulation technique than classical simulators, such as Icarus Verilog. You can expect to simulate five seconds of signal in ten to thirty seconds on a decent machine. Classic simulators would need several hours or even days for the same task.

For signal inspection using GTK Wave or the like, Verilator can output simulation data in VCD file format. You need to set **`WRITE_TRACE`** to 1 at the top of the corresponding C++ file.

Example session to observe the signals using GTK Wave:

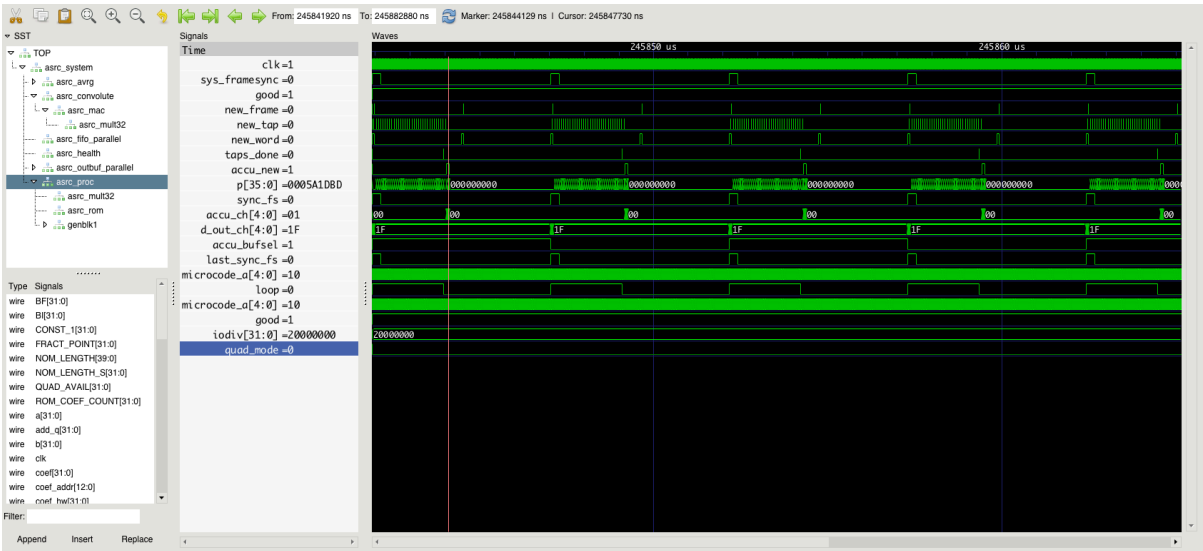

[1] https://www.veripool.org/projects/verilator/wiki/Installing
[2] https://github.com/libsndfile/sndfile-tools

4.2.1 Example: asrc_system_parallel_32ch

This example takes the synthesizable **asrc_system_parallel_32ch.v** found in the examples directory. It creates a signal and writes the resamples PCM to standard WAV files. The simulation stimulus is created in **asrc_system_parallel_32ch.cpp**. The shell script **asrc_system_parallel_32ch.sh** helps with building and running the simulation.

Run the simulation on the console with

./asrc_system_parallel_32ch.sh <what> <inrate> <outrate>

<What> is: 0=IR (Dirac) 1=sine 2=sweep

The example outputs 32 WAV files, following a special naming convention. Watch the console output.

```
$# ./asrc_system_parallel_32ch.sh 2 96003 48000
... (some compiler output)

Simulation started using SIM_WHAT=sweep FS_IN=96003 FS_OUT=48000
fs_cnt=12000 fs_cnt_in=24000.750005 iodiv=20004189 iodiv_r=7ffef9d sr=96002.99996
    out_data_count=11999 quad_mode=0 good=1
fs_cnt=24000 fs_cnt_in=48001.500821 iodiv=20004189 iodiv_r=7ffef9d sr=96002.99996
    out_data_count=23999 quad_mode=0 good=1
...

Simulation done.
WAV file 'asrc_sim-96003-48000-ch_1-sweep.wav' written.
Spectrogram 'asrc_sim-96003-48000-ch_1-sweep.wav.png' written.
WAV file 'asrc_sim-96003-48000-ch_2-sweep.wav' written.
Spectrogram 'asrc_sim-96003-48000-ch_2-sweep.wav.png' written.
....
```

Simulation output file name convention: **asrc_sim-<Fs in>-<Fs out>-<what>.wav**

Inspect the WAV files with the tools of your trust.

5 Performance

5.1 THD+N

Measured THD+N @ 0 dBFS 1 kHz sine BW 22Hz-22kHz for exemplary.

Fs_{out} and Fs_{in} are completely separate, asynchronous systems

Fs_{out} Hz	Fs_{in} Hz	THD+N dB
96000	32000	-143.7
96000	44100	-139.9
96000	48000	-145.5
96000	88200	-139.2
96000	96000	-144.7
48000	32000	-138.5
48000	44100	-137.1
48000	48000	-144.6
48000	88200	-140.2
48000	96000	-144.8
48000	192000	-145.7
48003	192000	-144.5

5.2 Frequency Response

Typical frequency response is +/-0dB at 0-18kHz and +0/-1.0dB at 0-20kHz.

Gain is about -0.05dB. This has not been set to 0 dB because of potential rounding errors of the scaling gain when upsampling. The scaling gain is calculated by the reciprocal of the given iodiv value (which is Fs_{in} divided by Fs_{out}).

The response is optimized to get shortest group delay as possible. Having -1 dB at 20 kHz might be considered a weakness by datasheet purists but this decision was the key to reach shortest group delay while maintaining excellent aliasing rejection within the audio band.

Illustrated frequency response represents double to single speed conversion with ratio=0.5. The actual frequency response may vary over different ratios.

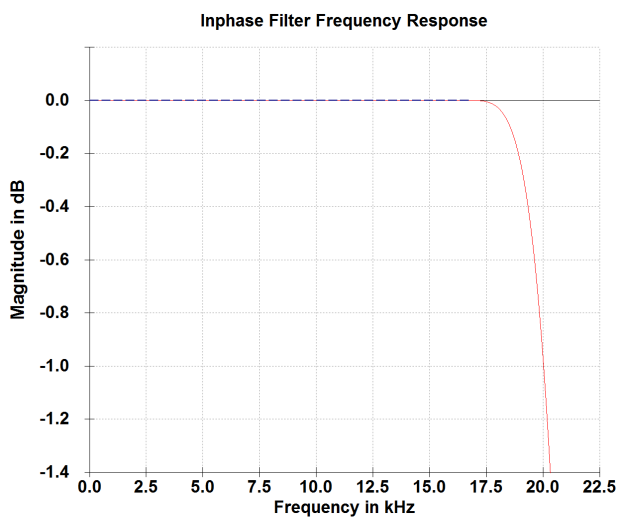

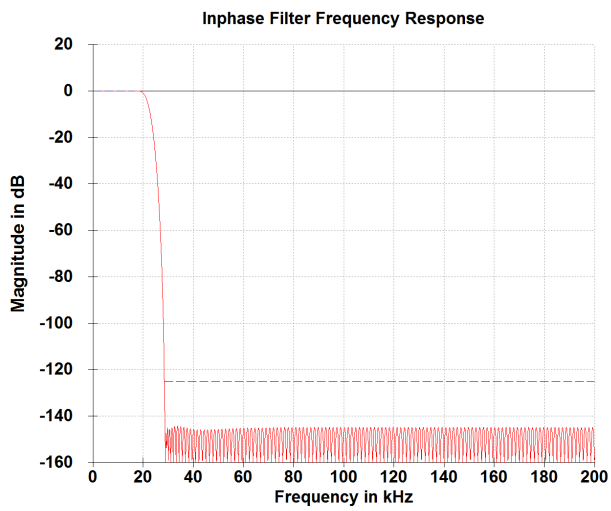

5.3 Group Delay

The phase response is linear. Hence, regardless of the frequency, the absolute latency always corresponds to the group delay.

Fs_{in}	Fs_{out}	$1/Fs_{out}$	Time (rounded)
48000	48000	19	396 µs
96000	48000	18	375 µs
192000	48000	11	229 µs
48000	96000	33	344 µs
96000	96000	18	188 µs
192000	96000	11	115 µs
48000	192000	35	182 µs
96000	192000	19	99 µs
192000	192000	10	52 µs

The delay is subject to change by +- 1 sample (Fs_{out}) because of some residual uncertain FIFO alignment owed to asynchronous systems (but it won't jitter).

The latency can be further reduced by 2-3 samples when lowering **`FIFO_COUNT_MIN`** in asrc_convolute.v if limiting the maximum ratio is acceptable.

6 Resource Utilization

On the example of using TDM I/O, one direction, **`QUAD_AVAIL`** set to 0.

6.1 Device vs. Maximum Channel Count

Series	Device	Channels
Spartan 6	XC6SLX4	32
Spartan 6	XC6SLX9	96
Spartan 6	XC6SLX16	224
Spartan 6	XC6SLX25	256
Artix 7	XC7A35T	>1024

6.2 Channel Count vs. Occupied Slices

Series	Channels	Occupied Slices
Spartan 6	32	430
Spartan 6	64	510

For reference, XC6SLX9 has 1430 Slices.

7 Evaluation of the Core using Digilent Arty

An evaluation license with hardware timeout is available for this core in form of a ready-made bitstream. The sources are included with the purchased license.

See instructions below.

7.1 Connecting the Core

7.1.1 Arty Pmod Pinout

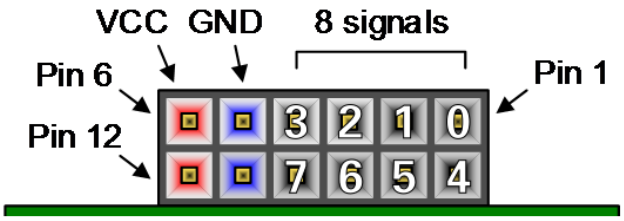

Bit numbers depicted in white digits.

7.1.2 FPGA Pinout Map

Pin	Bit	Pmod JA	Pmod JB	Pmod JC	Pmod JD
Pin 1	0	G13	E15	U12	D4
Pin 2	1	B11	E16	V12	D3
Pin 3	2	A11	D15	V10	F4
Pin 4	3	D12	C15	V11	F3
Pin 7	4	D13	J17	U14	E2
Pin 8	5	B18	J18	V14	D2
Pin 9	6	A18	K15	T13	H2
Pin 10	7	K16	J15	U13	G2

7.1.3 Actual Connections

Alls signals are LVCMOS 3.3V.

Direction (input or output) as seen from board perspective.

Pmod, Bit	Direction	Signal
JA0	Input	Input TDM Data Stride A (Channel 0..7 or 0..1)
JA1	Input	Input TDM Data Stride B (Channel 8..15 or 2..3)
JA2	Input	Input TDM Data Stride C (Channel 16..23 or 4..5)
JA3	Input	Input TDM Data Stride D (Channel 24..31 or 6..7)
JA6	Input	TDM Bitclock for inputs
JA7	Input	TDM FS for inputs
JC0	Output	”fifo good”
JC2	Output	Master Clock Derived divided by 512
JC3	Input	Asynchronous FS input (e.g. tie to JA7 or JD7 depending on the ”direction” switch)
JD0	Output	Resampled TDM Data Stride A (Channel 0..7 or 0..1)
JD1	Output	Resampled TDM Data Stride B (Channel 8..15 or 2..3)
JD2	Output	Resampled TDM Data Stride C (Channel 16..23 or 4..5)

Pmod, Bit	Direction	Signal
JD3	Output	Resampled TDM Data Stride D (Channel 24..31 or 6..7)
JD4	Input	24.576 MHz Master Clock 50% duty (fed to PLL for internal high speed clock)
JD6	Input	TDM Bitclock for outputs
JD7	Input	TDM FS for outputs

7.1.4 Switches

Indicator	Description
SW0	out_speedmode[0]
SW1	out_speedmode[1]
SW2	Direction
SW3	LD4 on/off

7.1.5 Status Indicators

Indicator	Description
LD4	on state of SW3, to verify switch knob direction
LD6	”fifo good”
LD7	7 Hz blink

7.1.6 Signal Constraints

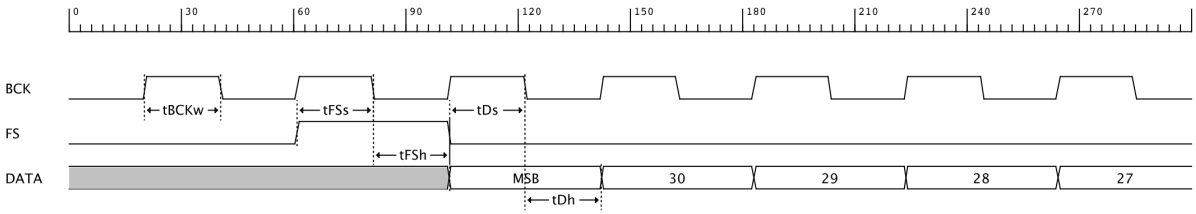

Name	Min
tBCKw	20 ns
tFSs	16 ns
tFSh	16 ns
tDs	16 ns
tDh	16 ns

When using the 32-channel example, you may run into signal integrity issues because of the high bit clock frequency. Keep cables short and groundings low-z.

7.2 Binaries

Pre-made binaries for evaluation are included in the src/target/Arty_xxx/build directory.

Target	Description
Arty_4x8	Four TDM I/O, eight channels each
Arty_4x2	Four TDM I/O, two channels each

How to flash the demo binary to the board

1. Connect the Micro-USB of Arty board to your host computer
2. Run or flash the file .bin-file either using openFPGAloader[3] or if you prefer full-stack double clicking, use the guide linked here[4]
3. Press the PROG button
4. The DONE led turns on after a second
5. LD7 flashes at a frequency of approx. 7 Hz if your input clock is valid
6. The IP is up and running

When using the 32-channel example, quad speed mode output is not working because this would violate the maximum bit clock frequency of 24.576 MHz.

[3] https://github.com/trabucayre/openFPGALoader
[4] https://reference.digilentinc.com/learn/programmable-logic/tutorials/arty-programming-guide/start?redirect=1#programming_the_arty_using_quad_spi

8 Appendix

8.1 Definition of Speed Modes

This document makes use of the term ”speed” as a reference to original 44.1k or 48k sample rates. Following table clarifies the relationship.

Sample Rate	Resulting ”Speed”
30000 to 56500	Single
57000 to 113000	Double
114000 to 230000	Quad

Document version: 106 / Okt 19, 2023 08:50